VALVE END VIEW

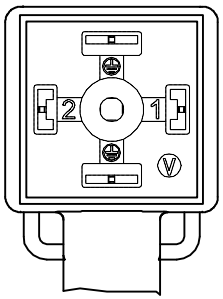

1 = BLACK #1
2 = BLACK #2
GND = GREEN/YELLOW

WIRING DIAGRAM

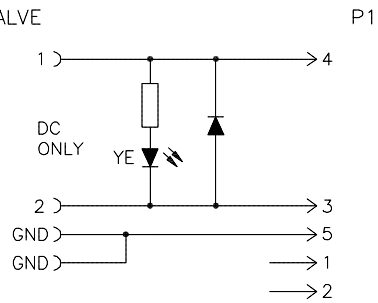

MALE END VIEW

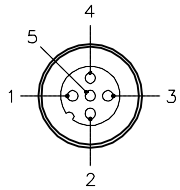

1 = N/C
2 = N/C
3 = BLACK #2
4 = BLACK #1
5 = GREEN/YELLOW

euro fast.

SPECIFICATIONS

CONTACT CARRIER MATERIAL	NYLON or TPU
CONTACT MATERIAL/PLATING	BRASS/SILVER (VALVE), BRASS/GOLD (P1)
MOLDED HEAD MATERIAL/COLOR	TPU/TRANSLUCENT GRAY (VALVE), YEL (P1)
COUPLING NUT MATERIAL/PLATING (P1)	BRASS/NICKEL
RATED CURRENT	4.0 A
RATED VOLTAGE	24-48 V
OUTER JACKET MATERIAL/COLOR	PVC/GRAY
CONDUCTOR INSULATION	PVC
NUMBER OF CONDUCTORS	3x18 AWG
TEMPERATURE RATING	-40°C to +105°C (-40°F to +221°F)
PROTECTION CLASS	MEETS NEMA 1,3,4,6P AND IEC IP67

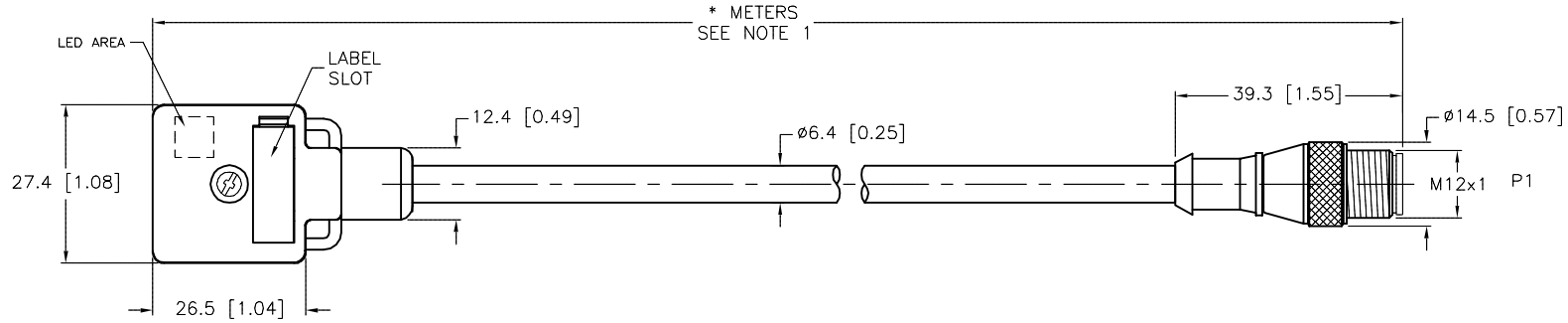

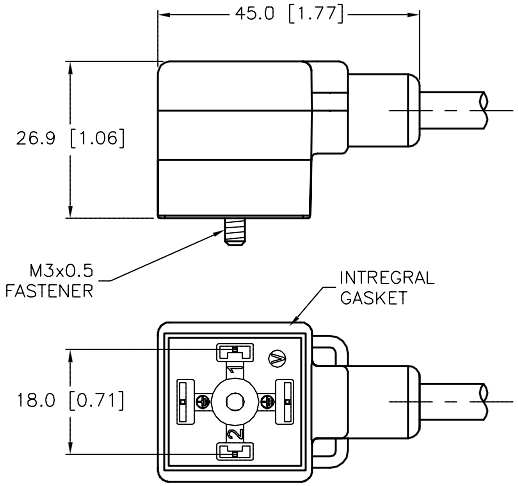

CABLE LENGTH	TOLERANCE *
ALL LENGTHS	+ 4% (OR 50mm) OF LENGTH - 0% (OR 0mm) OF LENGTH WHICHEVER IS GREATER
STRIP LENGTH	**TOLERANCE ***
0-7mm	±0.5mm
8-29mm	±1.0mm
30-49mm	±2.0mm
50-69mm	±3.0mm
70-100mm	±4.0mm
OVER 100mm	±5.0mm
* UNLESS OTHERWISE SPECIFIED	

SOURCE DRAWING - FOR REFERENCE ONLY

NOTES:

1. "*" INDICATES CABLE LENGTH IN METERS. CONTACT TURCK TO ORDER SPECIFIC LENGTHS.

REV	DESCRIPTION	BY	DATE	ECO NO.
F	UPDATE VALVE MOLD BODY PER ECO	NF	04/22/15	49583

RELATED DOCUMENTS
1.
2.
3.
4.

3RD ANGLE PROJECTION

THIS DRAWING IS CONFIDENTIAL AND THE PROPERTY OF TURCK INC. USE OF THIS DOCUMENT WITHOUT WRITTEN PERMISSION IS PROHIBITED.

TURCK INC
High Technology Sensors and Automation Controls

3000 CAMPUS DRIVE
MINNEAPOLIS, MN 55441
1-800-544-7769
(763) 553-7300
(763) 553-0708 fax
turck.com

MATERIAL: SEE SPECIFICATIONS

FINISH: SEE SPECIFICATIONS

ALL DIMENSIONS DISPLAYED ON THIS DRAWING ARE FOR REFERENCE ONLY

CONTACT TURCK FOR MORE INFORMATION

DRFT: RWC | DATE: 05/01/08
APVD: | SCALE: 1=1.3

UNIT OF MEASUREMENT
MILLIMETER [INCH]
DO NOT SCALE THIS DRAWING

DESCRIPTION: VAG 22-F669-*M-RS 5.3T

IDENTIFICATION NO.:

REV: F

FILE: 777001748 | SHEET 1 OF 1

Approved 04/27/2015, work order #76539 by T.S.